ENERTECH
ENERGY + TECHNOLOGY

2506 South Elm Street
Greenville, IL 62246
www.enertechgeo.com

Installation & Operation Manual:
Field Installed Electric Heater for VS/VT Series Compact Vertical Package Units

Rev.: B

20D219-01NN

Table of Contents:

Section 1: Model Nomenclature
Model Nomenclature 2

Section 2: Safety Labeling and Signal Words
Warnings, Cautions, and Notes 2

Section 3: Introduction
Introduction, Inspection, Definition, Unit Protection 3
Overview, Heater Compatibility and Components 3
Dimensional Data 4

Section 4: Installation
Overview, Considerations, Installation Steps 5-7

Section 5: Electrical Data
AXCH Electric Heat Electrical Data 7

Section 6: Wiring Diagrams
AXCH051SA / 5kW, AXCH101SA / 10kW 8
AXCH151SA / 15kW, AXCH101MA / 10kW 9
AXCH151MA / 15kW, AXCH201MA / 20kW 10

Section 7: Service Parts Lists
AXCH051SA / 5kW, AXCH101SA / 10kW 11
AXCH151SA / 15kW, AXCH101MA / 10kW 12
AXCH151MA / 15kW, AXCH201MA / 20kW 13

Section 1: Model Nomenclature

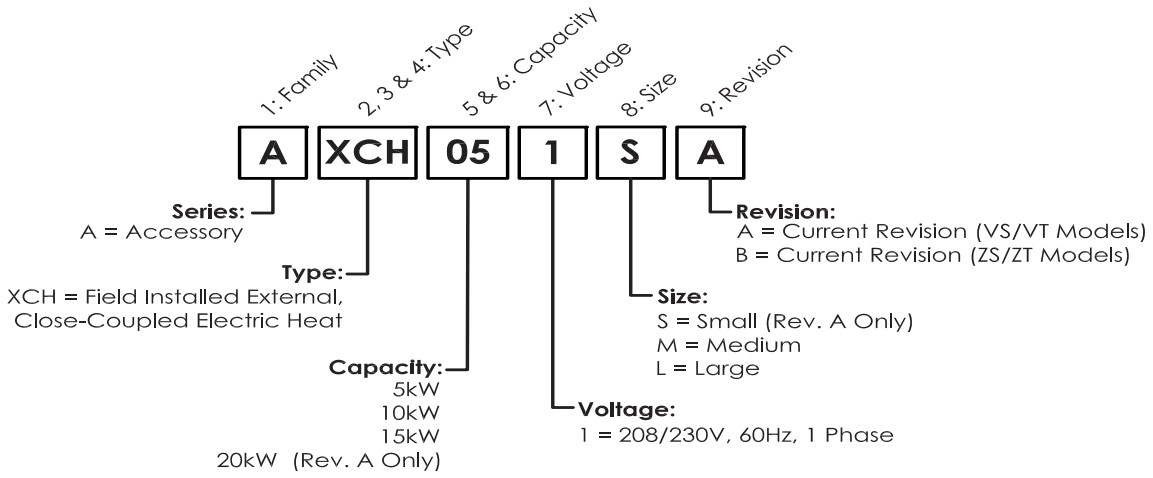

Section 2: Safety Labeling and Signal Words

DANGER, WARNING, CAUTION, and NOTE

The signal words **Danger, Warning, Caution,** and **Note** are used to identify levels of hazard seriousness. The signal word **Danger** is only used on product labels to signify an immediate hazard. The signal words **Warning, Caution,** and **Note** will be used on product labels and throughout this manual and other manuals that may apply to this product.

"NOTICE" Notification of installation, operation or maintenance information which is important, but which is NOT hazard-related.

"CAUTION" Indicates a potentially hazardous situation or an unsafe practice which, if not avoided, COULD result in minor or moderate injury, product or property damage.

"WARNING" Indicates a potentially hazardous situation which, if not avoided, COULD result in death or serious injury.

"DANGER" Indicates an immediate hazardous situation which, if not avoided, WILL result in death or serious injury.

"Note:" Used to highlight suggestions which will result in enhanced installation, reliability, or operation.

Signal Words in Manuals

The signal word WARNING is used throughout this manual in the following manner:

⚠ WARNING ⚠

The signal word CAUTION is used throughout this manual in the following manner:

⚠ CAUTION ⚠

Signal Words on Product Labeling

Signal words are used in combination with colors and/or on product labels.

⚠ CAUTION ⚠

CUT HAZARD

Failure to follow this caution may result in personal injury.

Sheet metal parts may have sharp edges or burrs. Use care and wear protective clothing and gloves when handling parts.

Section 3: Introduction

Introduction

The AXCH electric heaters are designed specifically for the Enertech VS/VT Series Geothermal Heat Pump Units. Good performance depends on proper application and correct installation. The information contained within this manual is intended for use by a qualified service technician familiar with safety procedures and equipped with the proper tools and test instruments.

⚠ WARNING ⚠

ELECTRICAL SHOCK HAZARD
Failure to follow this warning could result in personal injury, property damage and/or death. Installation or repairs made by unqualified persons can result in hazards to you and others.

Installation must conform with local building codes or, in the absence of local codes, with National Electrical Code ANSI/NFPA 70-2014 or current edition.

Inspection

Upon receipt of this geothermal accessory, carefully check the shipment against the packing slip and the freight company bill of lading. Verify that all units and packages have been received. Inspect the packaging of each unit for damages. Insure that the carrier makes proper notation of all damages and shortage on all bill of lading papers. Concealed damage should be reported to the freight company within 15 days. If not filled within 15 days, the freight company can deny all claims.

Note: Notify the Enertech Global, LLC shipping department of all damages within 15 days. It is the responsibility of the purchaser to file all necessary claims with the freight company.

Unit Protection

Protect units from damage and contamination due to plastering (spraying), painting and all other foreign materials that may be used at the job site. Keep all units covered on the job site with either the original packaging or equivalent protective covering. Cap or recap unit connections and all piping until unit is installed. Precautions must be taken to avoid physical damage and contamination which may prevent proper start-up and may result in costly equipment repair.

Overview

THE AXCH electric heater kits are designed and approved for use with specific VS/VT unit models. Table 1 lists all of the possible combinations.

Table 1: Heater Compatibility

Electric Heat Model	Description	VS/VT Models
AXCH051SA	5kW, 60Hz, 1 Phase, w/ Circuit Breaker	VS015-VS041 VT024-VT036
AXCH101SA	10kW, 60Hz, 1 Phase, w/Circuit Breaker	VS024-VS041 VT024-VT036
AXCH151SA	15kW, 60Hz, 1 Phase, w/ Circuit Breaker & Single Point Connection	VS036-VS041 VT036
AXCH101MA	10kW, 60Hz, 1 Phase, w/Circuit Breaker	VS042-VS072 VT042-VT072
AXCH151MA	15kW, 60Hz, 1 Phase, w/ Circuit Breaker & Single Point Connection	VS042-VS072 VT042-VT072
AXCH201MA	20kW, 60Hz, 1 Phase, w/ Circuit Breaker & Single Point Connection	VS060-VS072 VT060-VT072

Note: All heaters are only approved for use on single phase, 208/230V units. The 15kW heater comes with a single point connection jumper bar already installed.

Components

Each AXCH electric heat kit should contain the following items:

- (QTY: 1) Electric Heat Module Assembly
- (QTY: 2) Mounting Brackets
- (QTY: 48") Gasket Tape
- (QTY: 8) #8-18 x .375 Mounting Screws

Section 3: Introduction

Dimensional Data

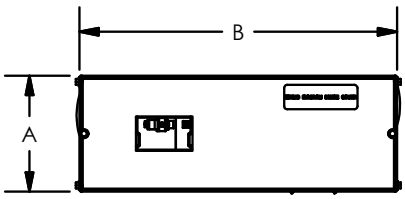

FRONT VIEW (5kW-20kW)

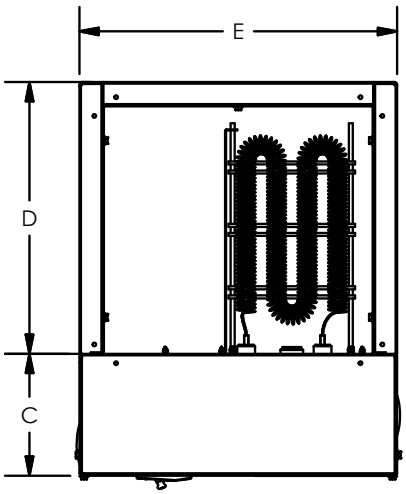

TOP VIEW (5kW-20kW)

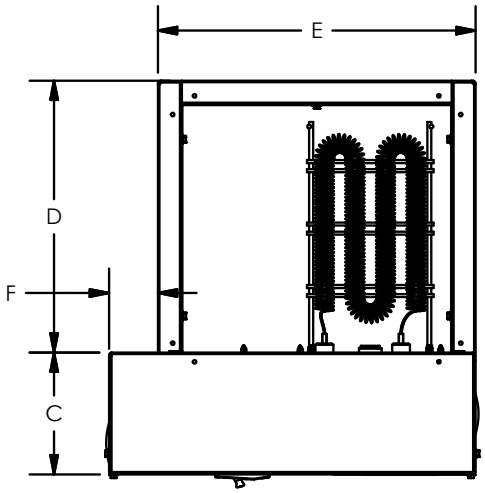

TOP VIEW (AXCH151SA ONLY!)

Dimensional Data Table						
Model	A	B	C	D	E	F
AXCH051SA	4.75"	13.00"	5.00"	11.15"	13.00"	N/A
AXCH101SA	4.75"	13.00"	5.00"	11.15"	13.00"	N/A
AXCH151SA	4.75"	15.00"	5.00"	11.15"	13.00"	2.00"
AXCH101MA	6.50"	16.50"	5.00"	14.55"	16.50"	N/A
AXCH151MA	6.50"	16.50"	5.00"	14.55"	16.50"	N/A
AXCH201MA	6.50"	16.50"	5.00"	14.55"	16.50"	N/A

Representative drawing only, some models may vary in appearance.

Section 4: Installation

Mounting the Heater

1. Shut OFF electrical power at unit disconnect switch or service panel.
2. In order to determine correct heater orientation, remove electric heat module from box, and set on top of the unit over the discharge air opening. Place the module on the unit, so that the circuit breakers are facing the front. The control whip will be coming out the right side of the electric heater control box for left return applications, and the left side of the electric heater control box for right return applications.

Note: If duct flanges (provided with the unit) have been installed on top of unit, remove, and set aside to be used later.

3. Once the correct orientation has been determined, take the heater back off the unit. Cut the gasket tape provided in the kit into (4) equal sections. Apply them to the bottom perimeter of the heater in order to create an air tight seal between the top cover of the unit, and the heater. See Figures 1a and 1b below.

Figure 1a

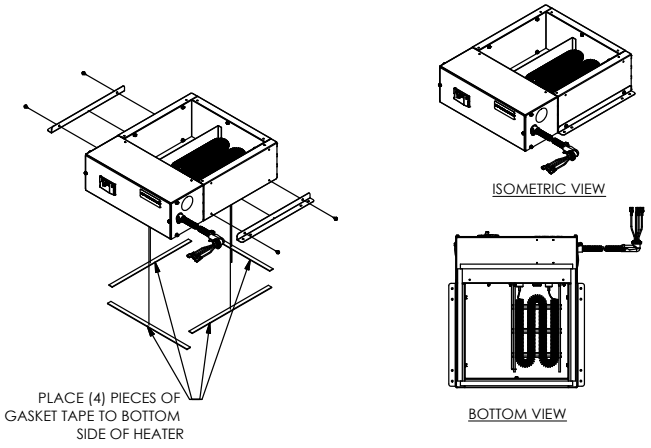

LEFT RETURN HEATER ORIENTATION

Important: Pay special attention to which side the tape is being applied to.

Figure 1b:

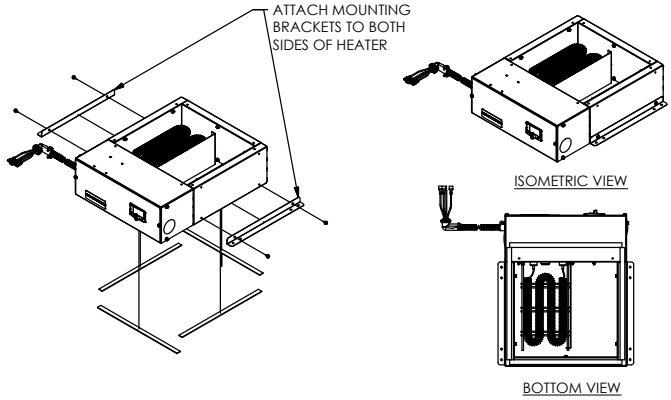

RIGHT RETURN HEATER ORIENTATION

4. Attach the (2) mounting brackets to each side of the heater, making sure that the bottom of the bracket is flush with the bottom side of the heater. The bottom side of the bracket (part that will attach to the top cover of the unit) has four holes. Four of the #8 screws, provided in the kit, will be needed to attach the brackets.
5. Take the entire assembly and place it on top of the unit, centered over the discharge air opening. The mounting brackets have (2) sets of holes. One set will line up with the holes on the top cover depending on whether the unit is a left return or a right return.
6. Using the other (4) screws provided in the kit, mount the heater to the top of the unit. See Figures 1a and 1b above.

Note: If installed properly on the VS/VT 015 through 030 models, the inner surface of the heater (the surface with the thermal limit switches) should be ½" from the inner surface of the discharge opening. On the VS/VT 036 through 072 models, the inner surfaces of the heater should be flush with the inner surfaces of the discharge opening. See Figures 3a and 3b.

Figure 3a

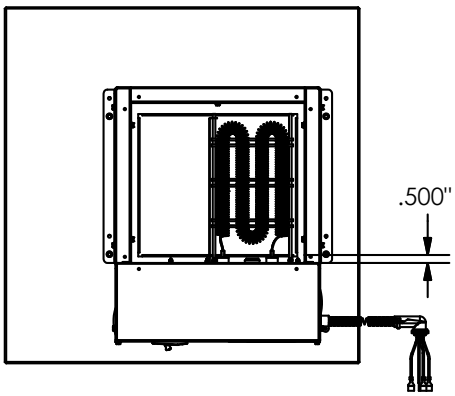

VS/VT015-030 TOP VIEW

Figure 3b

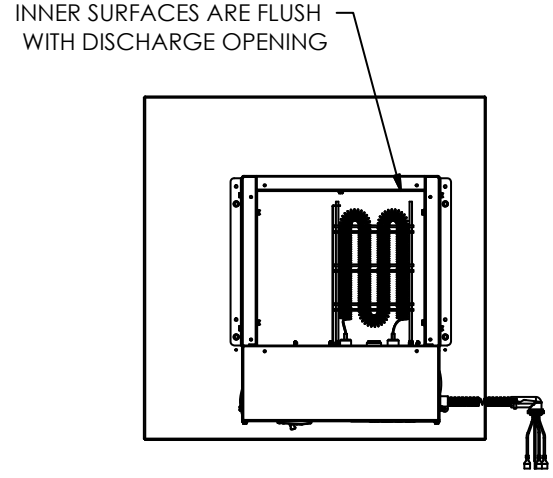

VS/VT036-072 TOP VIEW

7. Use the duct flanges (provided with the unit) and hardware, and mount the duct flanges to the top of the heater. See Figure 2.

8. Use aluminum tape (not provided) to seal any air gaps between the heater and the duct.

Low Voltage Wiring

9. Remove the front door of the unit to expose the control box. Remove the screw holding the control box to the corner post, and hinge the control box upward.
10. Remove the 7/8" cap plug, for the electric heat connections, in the side of the front right leg (for left return units) and the front left leg (for right return units). The cap-plug will have a label above it, which states 'AUX HEAT CONTROL WIRING'.
11. Take the conduit whip from the heater, and attach the 90° conduit fitting to the leg, through the Aux Heat Control Wiring access hole. See Figure 2.

Figure 2.

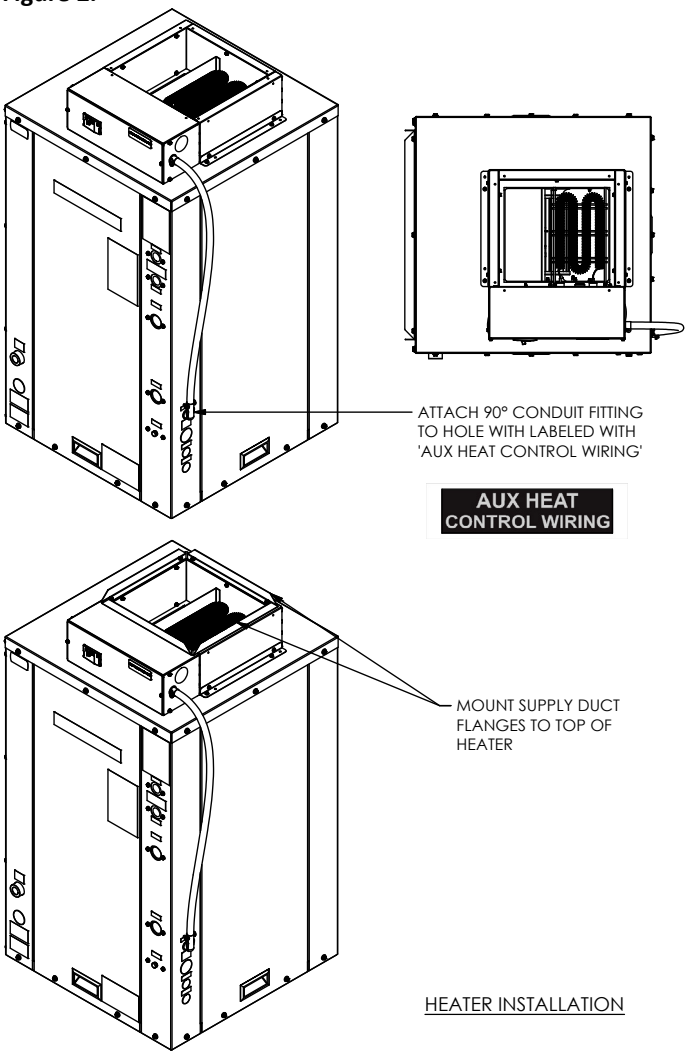

12. Route the wires into the control box and wire as shown in the following Schematic 1.

Schematic 1:

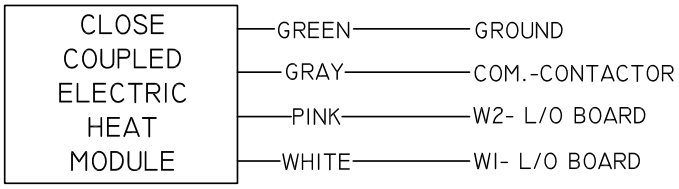

Notes: The 5kW heater will not have a 'W2' (pink) wire, since it only has one stage of electric heat. VS/VT units manufactured prior to February 29, 2015 may not have the white wire running to the W1 spade lug on the lock out board installed by the factory. Make a field fabricated jumper wire to create the connection per the wiring diagrams in the VS/VT IOM 20D218-02NN shipped with the unit.

Contact Technical Services 618-664-5860 with any questions.

13. Once all low voltage wiring is complete, place front panel back on unit

Power Supply Wiring

14. Remove the cap plug on the side of the electric heat control box, route the electric heat power supply wiring through the hole, and attach the conduit to the side of the box. The hole closest to the circuit breakers should be used, if at all possible. If not, use the hole on the same side the low voltage control wiring comes out.

Note: U.S. CUSTOMERS ONLY
When installing a 15kW or 20kW heater in the U.S., the single point connection bar assembly may be removed. In this case, refer to the second Electrical Data Table in section 5 for appropriate wire gauge and maximum size for the over current protection device.

15. Connect supply voltage wires to the line side of the circuit breakers, and connect the ground wire to the open ground lug. See wiring diagram label, or wiring schematics in Section 6, to verify placement of all connections.

⚠ CAUTION ⚠

All line voltage connections MUST be made with copper wire. The power supply wiring MUST have overcurrent protection. This can either be fuses or circuit breakers. The maximum size for the overcurrent protection device is shown in the column labeled MOCP in the Electric Data Table in Section 5.

16. Permanently ground the electric heater in accordance with local codes and ordinances and in the United States, with the current edition of the National Electrical Code. Use a copper conductor of the appropriate size from the electric heat ground lug, to a grounding lug on the circuit breaker panel.

Section 4: Installation

Air Flow

17. Airflow requirements are different between models. Please refer to the unit Installation Instructions for airflow set-up information.

Temperature Rise Check

18. To determine temperature rise, measure the temperature difference between the supply and return air temperatures.

Note: The maximum outlet air temperature for all models is 200°F (93.3°C)

Section 5: Electrical Data

Technical Data Single Phase w/ Circuit Breaker

Heater Model	Supply Circuit Number	Heat kW		Heater kW Per Circuit		FLA Total AMPS		MCA- Minimum Circuit Ampacity		MOCP Maximum Overcurrent Protective Device (AMPS) NEC 240.4(B)		Recommended						
												Branch Circuit Conductor 75°C Copper NEC 310.15(B)(16), Ch. 9 Table 9					Ground Wire NEC 250.122	
												# of Wires	Min Wire Size (AWG)		Max Length (ft)		Min Wire Size (AWG)	
		240	208	240	208	240	208	240	208	240	208		240	208	240	208	240	208
AXCH051SA	Single	5	3.75	2.5	1.875	20.8	18.0	26.0	22.5	30	25	2	10	12	144	87	10	
AXCH101SA AXCH101MA	Single	10	7.5	5	3.75	41.7	36.1	52.1	45.1	60	50	2	6	8	176	111	8	10
				5	3.75													
AXCH151SA* AXCH151MA*	Single	15	11.25	5	3.75	62.5	54.1	78.1	67.6	80	70	2	4	4	186	186	8	
				10	7.50													
AXCH201MA*	Single	20	15	10	7.50	83.3	72.1	104.2	90.1	110	100	2	2	3	216	173	6	8
				10	7.50													

*Single Point Connection

Technical Data (US Customers ONLY!!) Single Phase w/ Circuit Breaker- Single Point Connection Removed

Heater Model	Supply Circuit Number	Heat kW		Heater kW Per Circuit		FLA Total AMPS		MCA- Minimum Circuit Ampacity		MOCP Maximum Overcurrent Protective Device (AMPS) NEC 240.4(B)		Recommended						
												Branch Circuit Conductor 75°C Copper NEC 310.15(B)(16), Ch. 9 Table 9					Ground Wire NEC 250.122	
												# of Wires	Min Wire Size (AWG)		Max Length (ft)		Min Wire Size (AWG)	
		240	208	240	208	240	208	240	208	240	208		240	208	240	208	240	208
AXCH151SA AXCH151MA	L1/L2	15	11.25	5	3.75	20.8	18.0	26.0	22.5	30	25	2	10	12	144	87	10	
	L3/L4			10	7.50	41.7	36.1	52.1	45.1	60	50	2	6	8	176	111	10	
AXCH201MA	L1/L2	20	15	10	7.50	41.7	36.1	52.1	45.1	60	50	2	6	8	176	111	10	
	L3/L4			10	7.50	41.7	36.1	52.1	45.1	60	50	2	6	8	176	111	10	

Section 6: Wiring Diagrams

AXCH051SA / 5kW

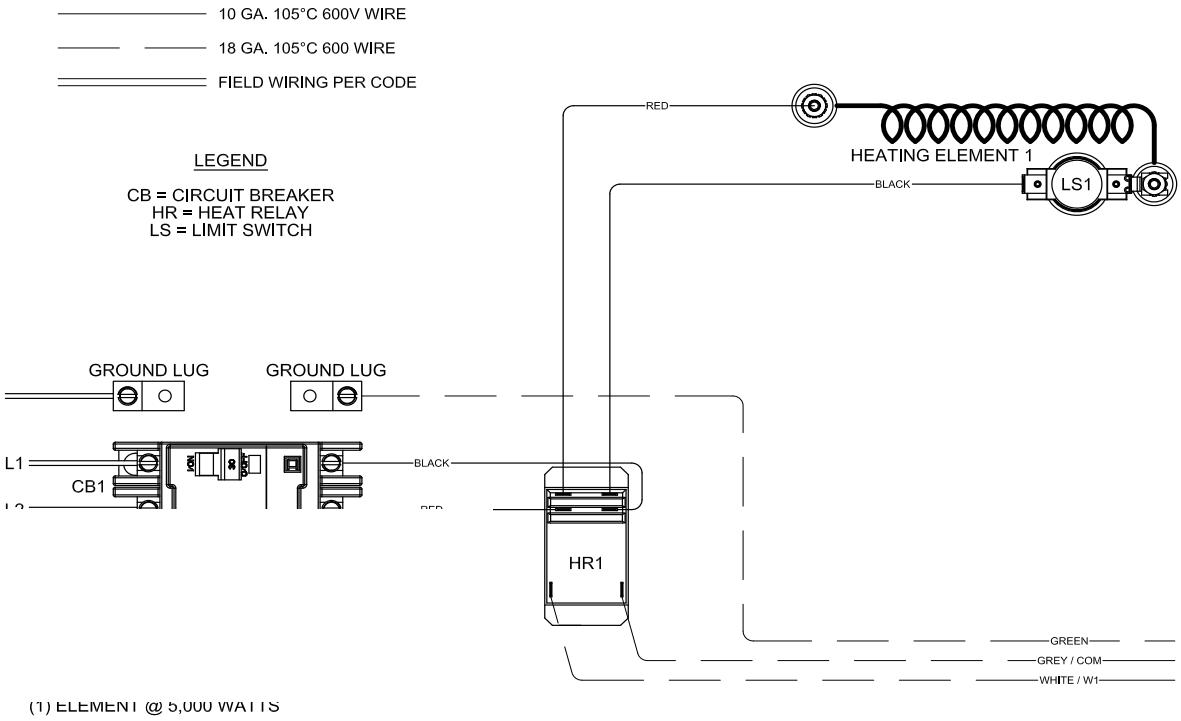

(1) ELEMENT @ 5,000 WATTS

AXCH101SA / 10kW

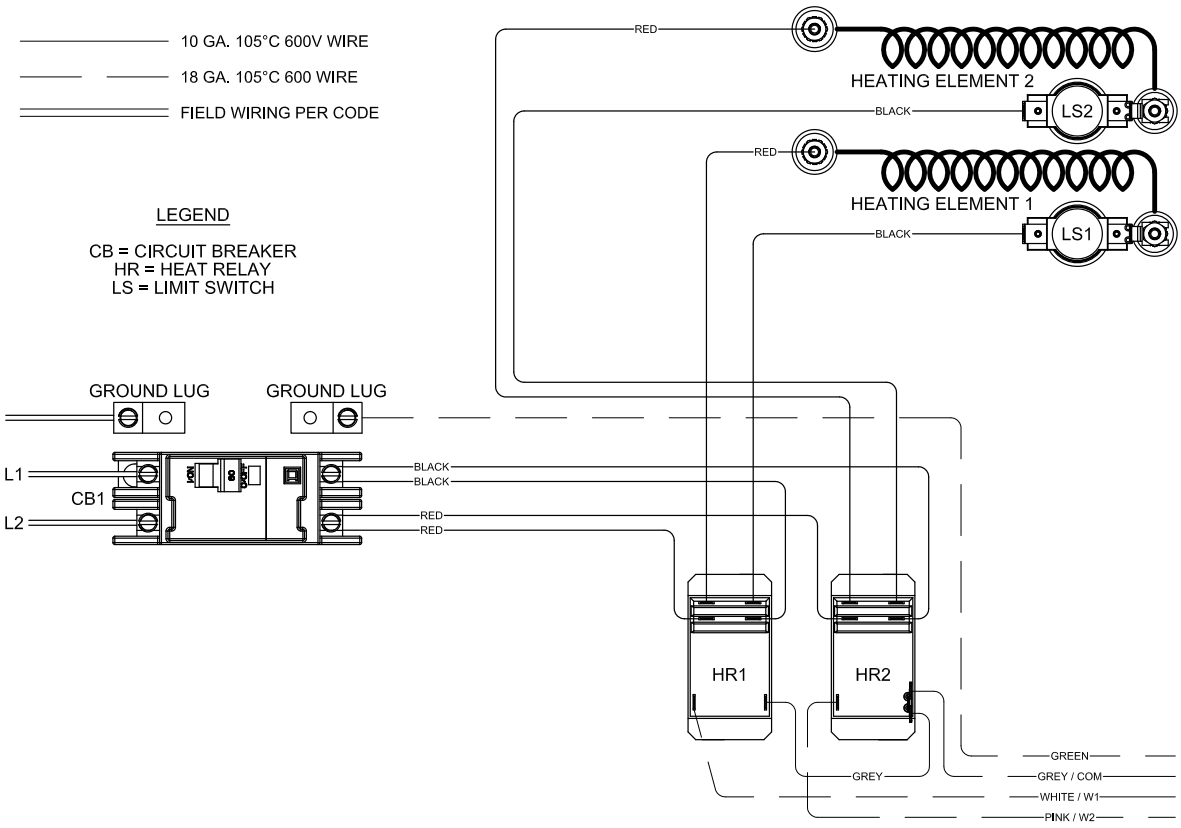

Section 6: Wiring Diagrams

AXCH151SA / 15kW

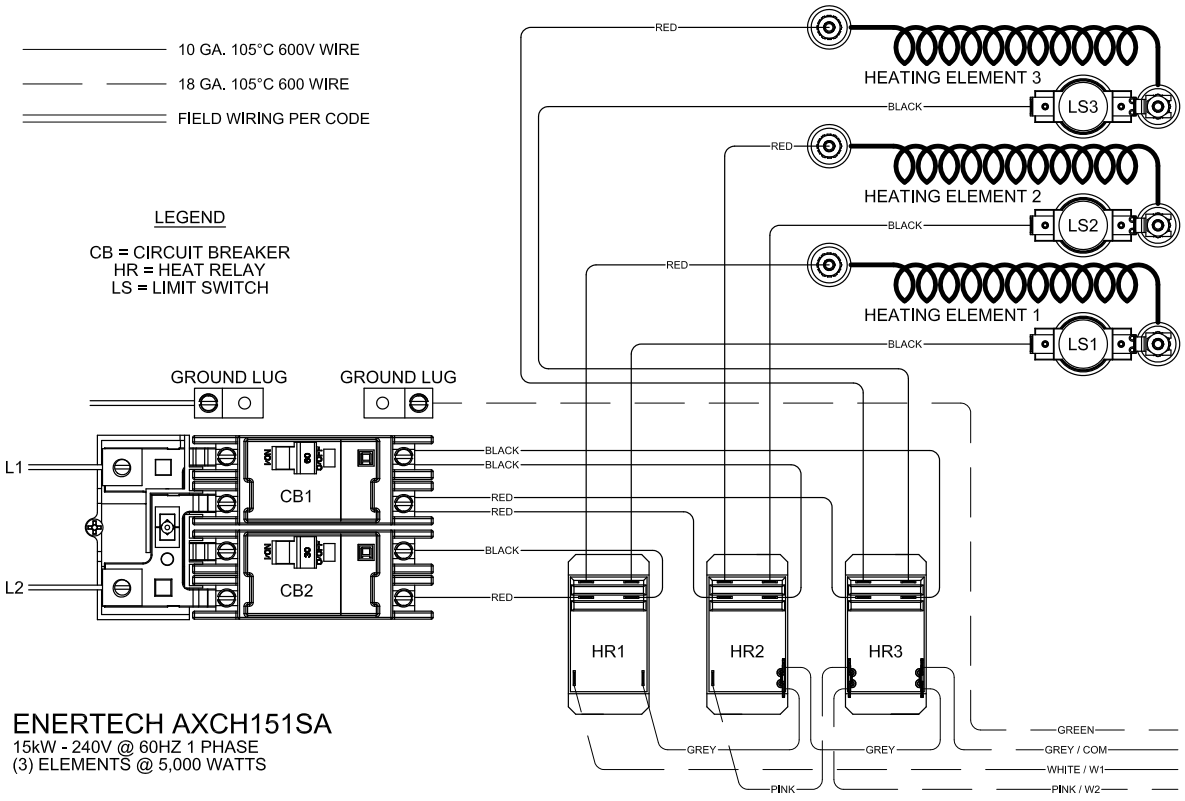

AXCH101MA / 10kW

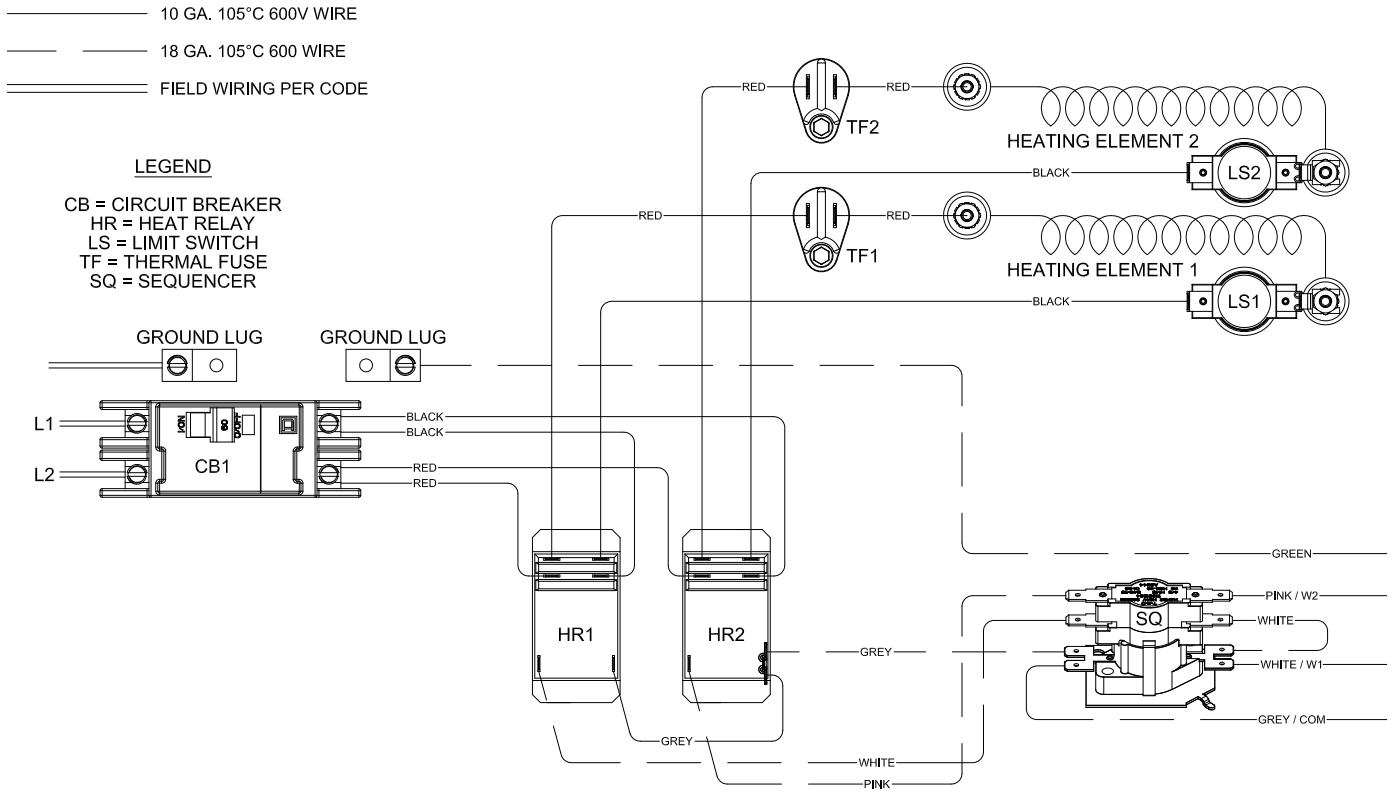

Section 6: Wiring Diagrams

AXCH151MA / 15kW

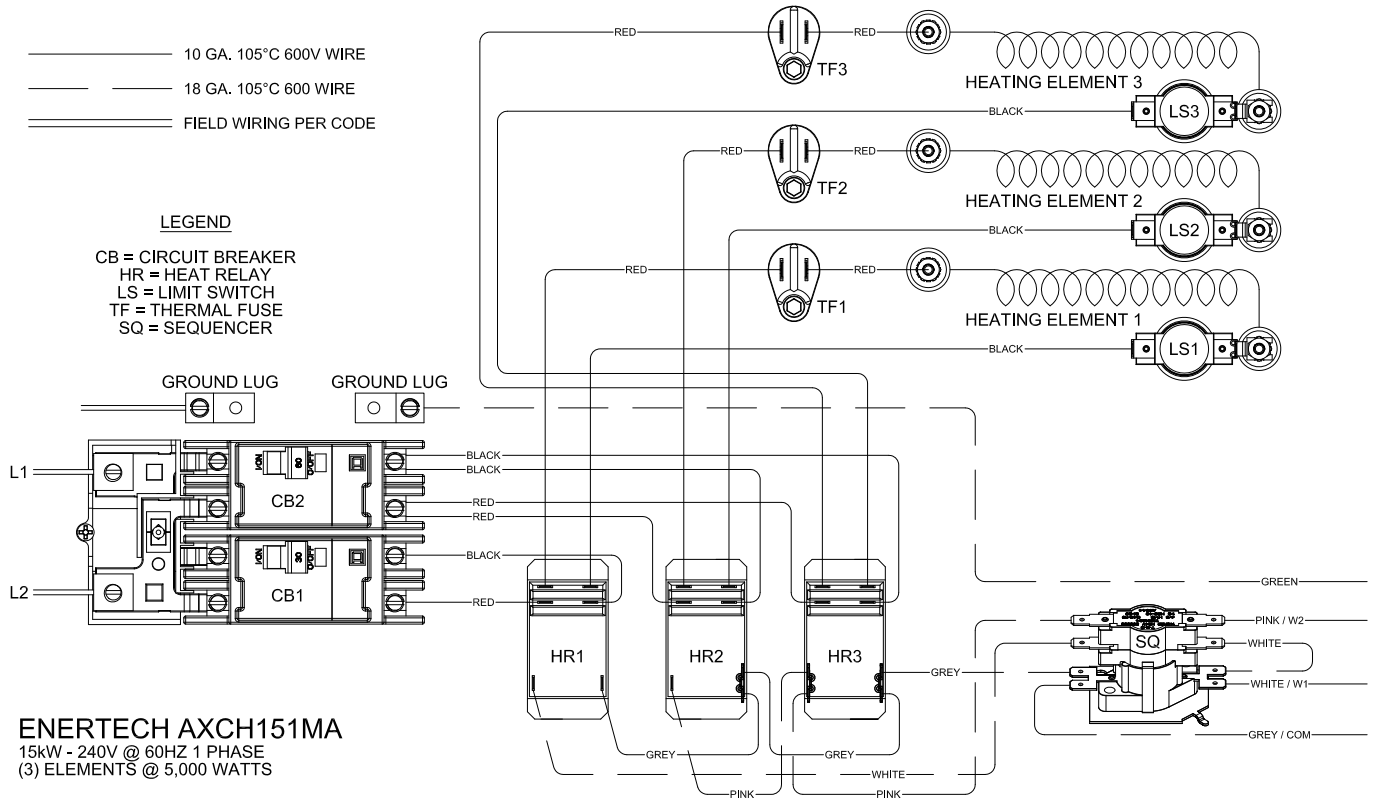

AXCH201MA / 20kW

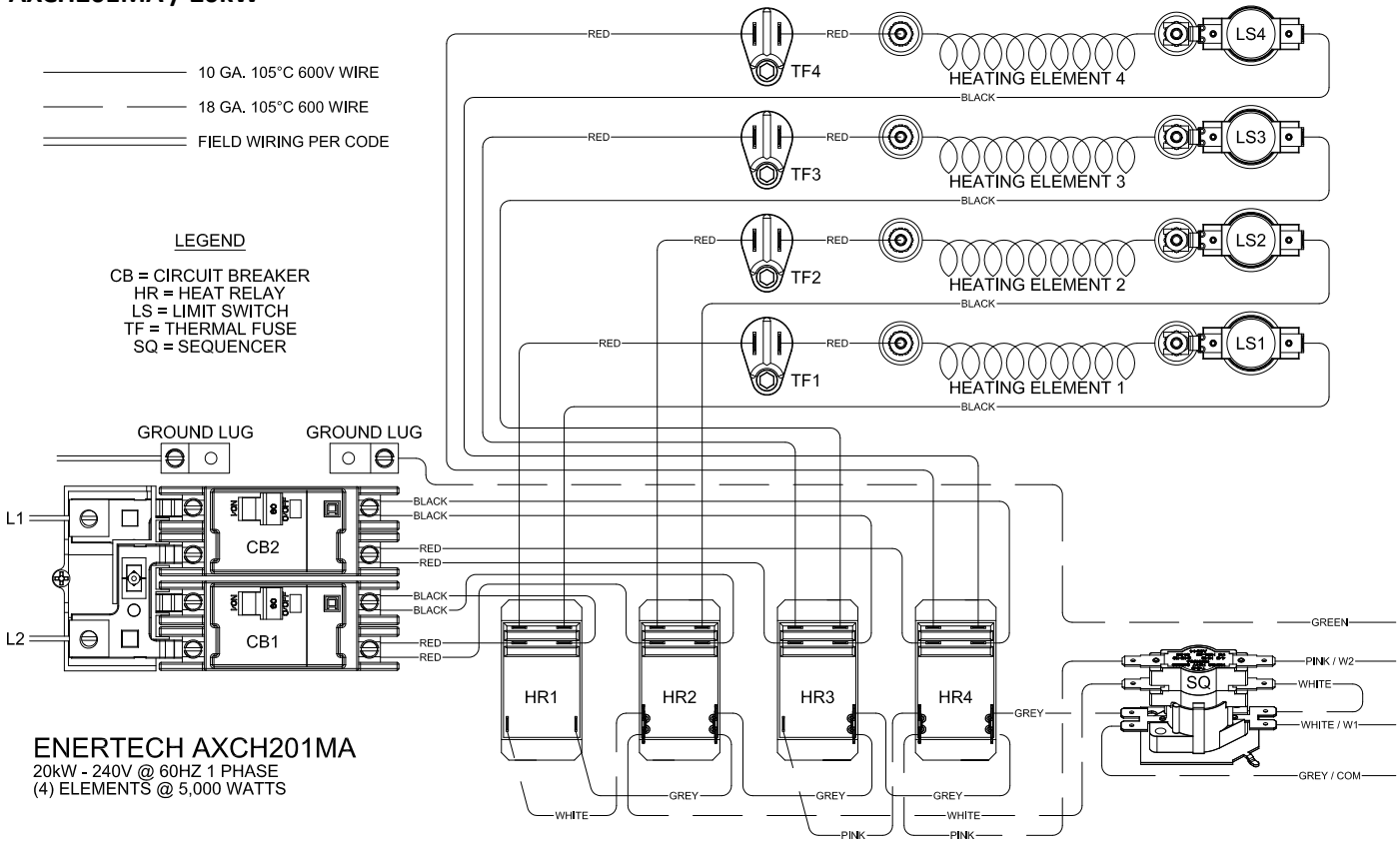

Section 7: Service Parts Lists

AXCH051SA / 5kW

PARTS LIST			
ITEM	PART NUMBER	DESCRIPTION	QTY
1	41P092-01NN	WIRING HARNESS ASM, 3 CONDUCTOR WHIP	1
2	43P012-01NN	30A BREAKER	1
3	43P027-01NN	TEMPERATURE LIMIT	1
4	43P026-01NN	RELAY, DPST, 24VAC	1

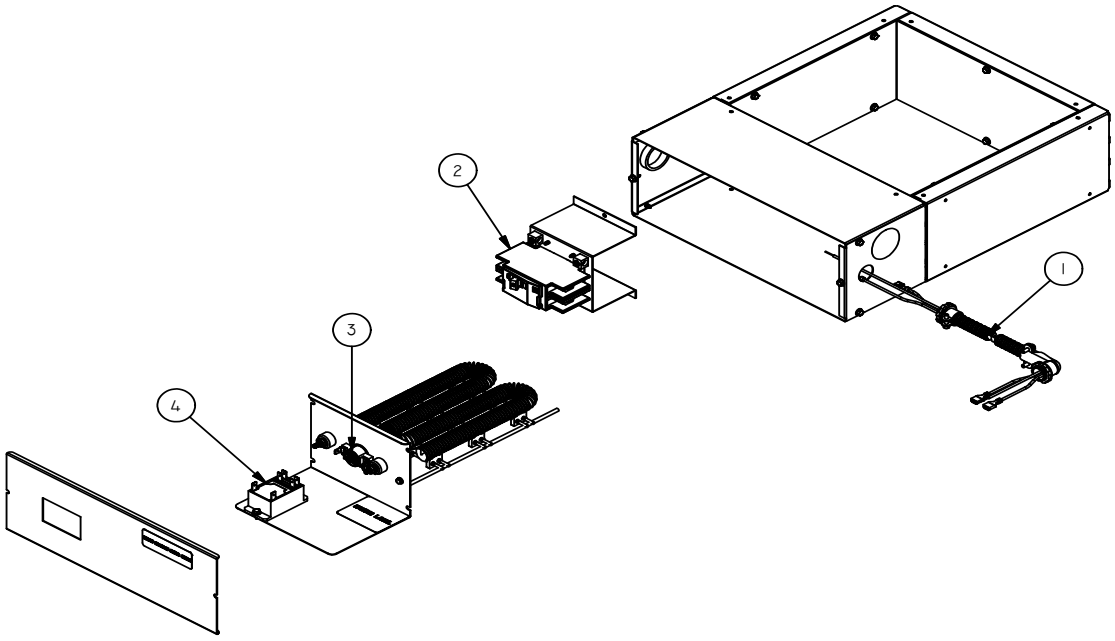

AXCH101SA / 10kW

PARTS LIST			
ITEM	PART NUMBER	DESCRIPTION	QTY
1	41P092-02NN	WIRING HARNESS ASM, 4 CONDUCTOR WHIP	1
2	43P011-01NN	60A BREAKER	1
3	43P027-02NN	TEMPERTURE LIMIT	1
4	43P026-01NN	RELAY, DPST, 24VAC	1

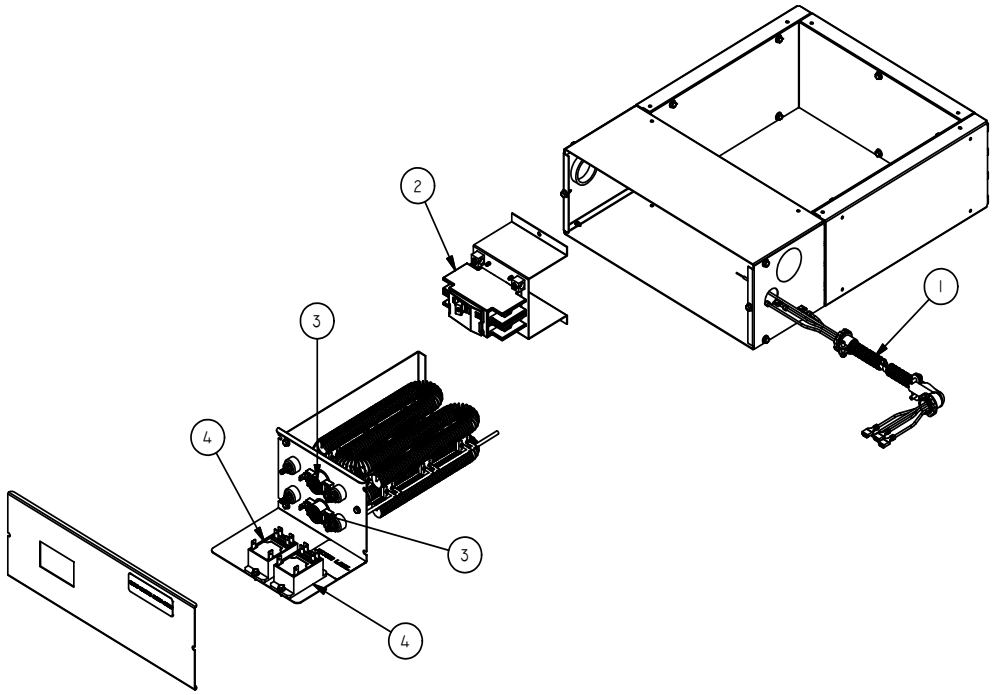

Section 7: Service Parts Lists

AXCH151SA / 15kW

ITEM	PART NUMBER	DESCRIPTION	QTY
1	41P092-02NN	WIRING HARNESS ASM, 4 CONDUCTOR WHIP	1
2	43P011-01NN	60A BREAKER	1
3	43P012-01NN	30A BREAKER	1
4	43P027-01NN	TEMPERATURE LIMIT	1
5	43P026-01NN	RELAY, DPST, 24VAC	1
6	43P028-01NN	SINGLE POINT JUMPER BAR ASM	1

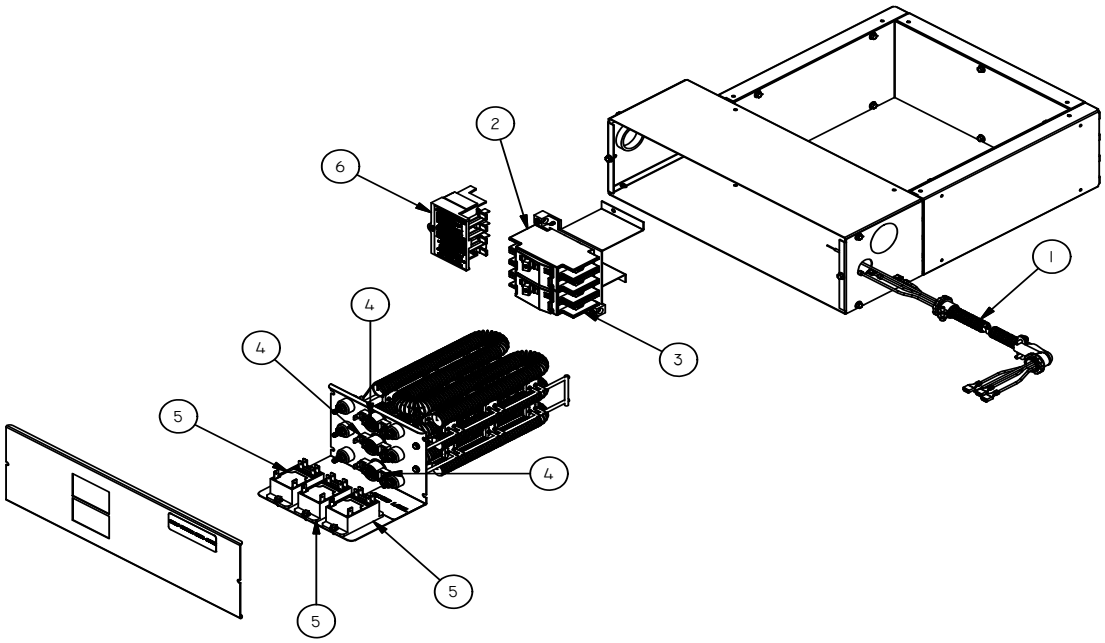

AXCH101MA / 10kW

PARTS LIST			
ITEM	PART NUMBER	DESCRIPTION	QTY
1	41P092-02NN	WIRING HARNESS ASM, 4 CONDUCTOR WHIP	1
2	43P011-01NN	60A BREAKER	1
3	43P027-01NN	TEMPERATURE LIMIT	2
4	43P026-01NN	RELAY, DPST, 24VAC	2
5	43P032-01NN	THERMAL FUSE	2
6	43P039-01NN	SEQUENCER, DPST	1

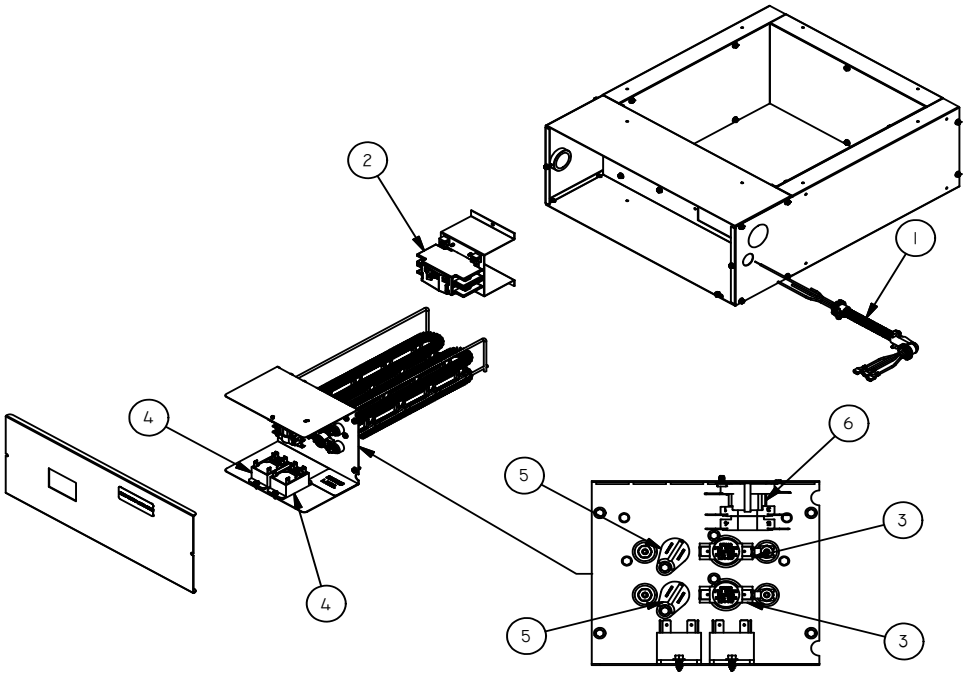

Section 7: Service Parts Lists

AXCH151MA / 15kW

PARTS LIST			
ITEM	PART NUMBER	DESCRIPTION	QTY
1	41P092-02NN	WIRING HARNESS ASM, 4 CONDUCTOR WHIP	1
2	43P011-01NN	60A BREAKER	1
3	43P012-01NN	30A BREAKER	1
4	43P027-03NN	TEMPERATURE LIMIT	3
5	43P026-01NN	RELAY, DPST, 24VAC	3
6	43P028-01NN	SINGLE POINT JUMPER BAR ASM	1
7	43P032-01NN	THERMAL FUSE	3
8	43P039-01NN	SEQUENCER, DPST	1

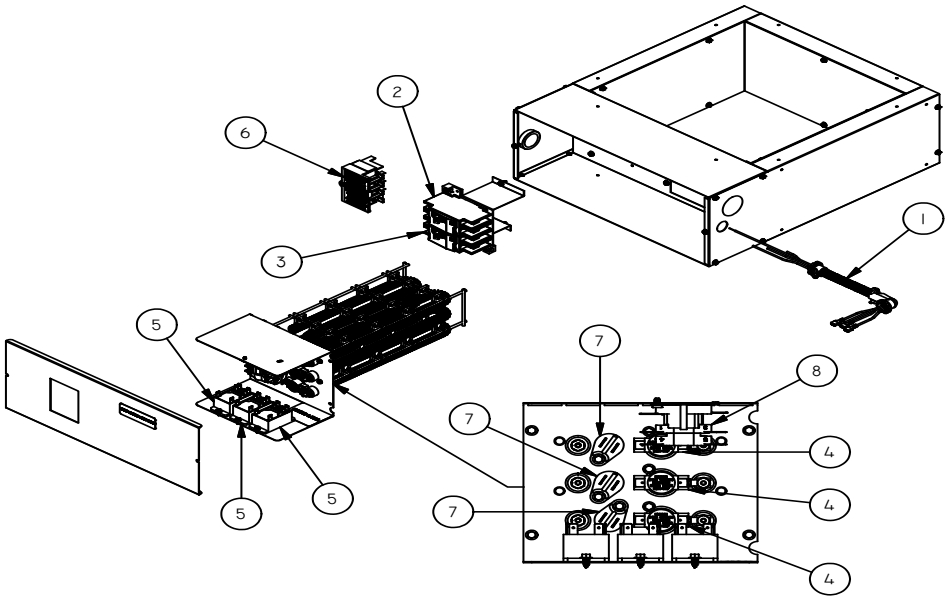

XCH201MA / 20kW

PARTS LIST			
ITEM	PART NUMBER	DESCRIPTION	QTY
1	41P092-02NN	WIRING HARNESS ASM, 4 CONDUCTOR WHIP	1
2	43P011-01NN	60A BREAKER	2
3	43P027-03NN	TEMPERATURE LIMIT	4
4	43P026-01NN	RELAY, DPST, 24VAC	4
5	43P028-01NN	SINGLE POINT JUMPER BAR ASM	1
6	43P032-01NN	THERMAL FUSE	4
7	43P039-01NN	SEQUENCER, DPST	1

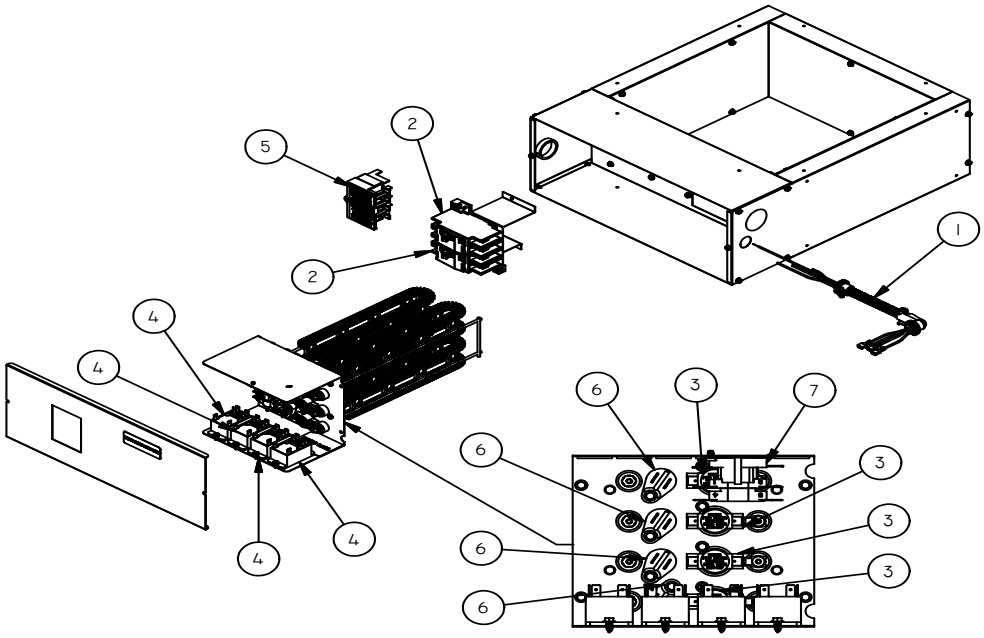

ENERTECH

ENERGY + TECHNOLOGY

enertechusa.com

Revision Table

Date	Description of Revision	Page
19DEC2019	Heater Compatibility Table updated	3
10APR2019	Heater Compatibility Table updated to include model 041	3
14JUN2016	Revised nomenclature	2
18JAN2016	Added medium size heaters	6
27APR2015	Added dimensional data	4
23FEB2015	Document created	ALL

Enertech Global is continually working to improve its products. As a result, the pricing, design and specifications of each product may change without notice and may not be as described herein. For the most up-to-date information, please visit our website, or contact our Customer Service department at info@enertechgeo.com. Statements and other information contained herein are not express warranties and do not form the basis of any bargain between the parties, but are merely Enertech Global's opinion or commendation of its products.

© Enertech Global, LLC. 2010